SL210/SL210i
(800-1000 Series)

SL212/SL212i
(800 -1000 Series)

SL210/SL210i Moveable Pad Capacity 8,000 lbs.
SL210/SL210i Capacity 10,000 lbs.
SL212/SL212i Capacity 12,000 lbs.

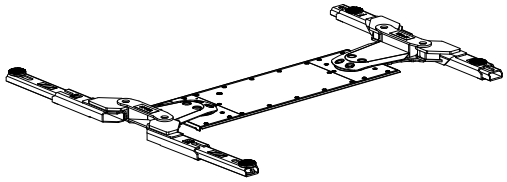

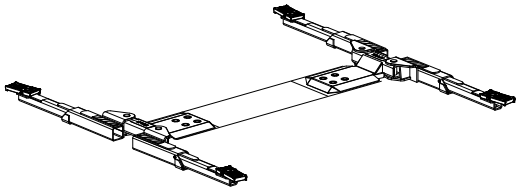

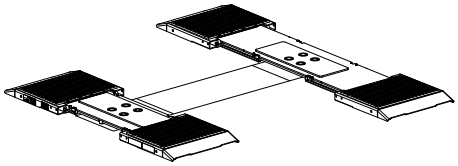

PARTS BREAKDOWN

IMPORTANT: When ordering parts or requesting service always give exact model and power unit serial number. Model number is shown on nameplate attached to air lock release valve. Power unit serial number is located on side of power unit.

OWNERS RECORD
Complete information at right and keep in a safe place.

Date Installed _____

Installed in Bay # _____

Power Unit Serial # _____

Power Unit Model # _____

Lift Serial # _____

Lift Model # _____

NOTE: For replacement parts -See your nearest Rotary Parts Distributor.

© November 2012 by Vehicle Service Group.
All rights reserved.

CO8449

LP20446 - LP20449

PB5-12-5
Rev. N 11/19/2012

MAIN LIFT EXPLODED DETAIL

1	1/2”-13NC x 2” Self Tap Screw, Plated	40268
2	Cover Plate	T120209
3	One Piece Gasket	T140163
4	Wiper Seal	T140118
5	Zerk Fitting L#5000 1/8” Pipe	T140007
6	Guide Barrel Assembly	T110175
7	1-1/8”-7NC x 3” HHCS, Gr. 5, Plated	40606
8	1/2”-13NC x 2-3/4” HHCS, Gr. 5	40341
9	9/16” Internal Tooth Lockwasher, Plated	40998
10	Male Connector for Nylon Tube	FC5225-47
11	Latch Bar Plate	T130342
12	1-1/8” Int. Tooth Lockwasher, Plated	40608
13	1-1/8”-7NC Hex Nut, Plated	40607
14	1/4” NPT x 1/4” Push Fit Swivel Elbow	FC5341-90
15	Union Tee inBAY® Controls	FC5225-46
	Union Tee Conventional Controls	FC5225-98
16	Stand Assembly	T110165
17	1 CSK Pipe Plug	12011
18	Tie Channel	T130345
19	Latch Bar	T130341
20	Hose Bracket Assembly	T120158
21	Vertical Hose	T140170
22	Bulkhead Adapter	T140132
23	Plunger Hose	T140169
24	SS Bulkhead Union Tee	T140134
25	Bearing	T140148
26	5/16”-18NC Flanged Whizlock Nut	40678
27	Hose Clip	FJ7499
28	Equalizer	T110176
29	5/8” Helical Spring Lockwasher, Plated	40961
	5/8”-11NC x 2-1/2” Hex SHCS	40343
30	1/2"-13NC x 1-1/2" HHCS Grade 5	40302
31	End Anchoring Frame	T120285
32	Containment (with Uniseal hole drilled)	T140202
33	2” Uniseal	T140023
34	Frame	T120266
35	1/2”-13NC x 1” HHCS, Gr. 5	40261

36	Guide Barrel Fitting Kit	T100147
37	1/4” Nylon Tube (26” long)	T140213
38	Union Tee	FC5225-46
39	Lift Bar Weldment	T120214
40	1/2”-13NC x 1-1/4” Countersunk SHCS	40337
41	1/2”-13NC Hex Flanged Whizlock Nut	40704
42	Wheel Spotting Dish Kit	FF729
43	Side Anchoring Frame	T120286
44	Plunger	T120161
45	LDS Valve Assembly Replacement Kit	T100142
46	Stand Assembly Compact inbay and Conventional	T120280

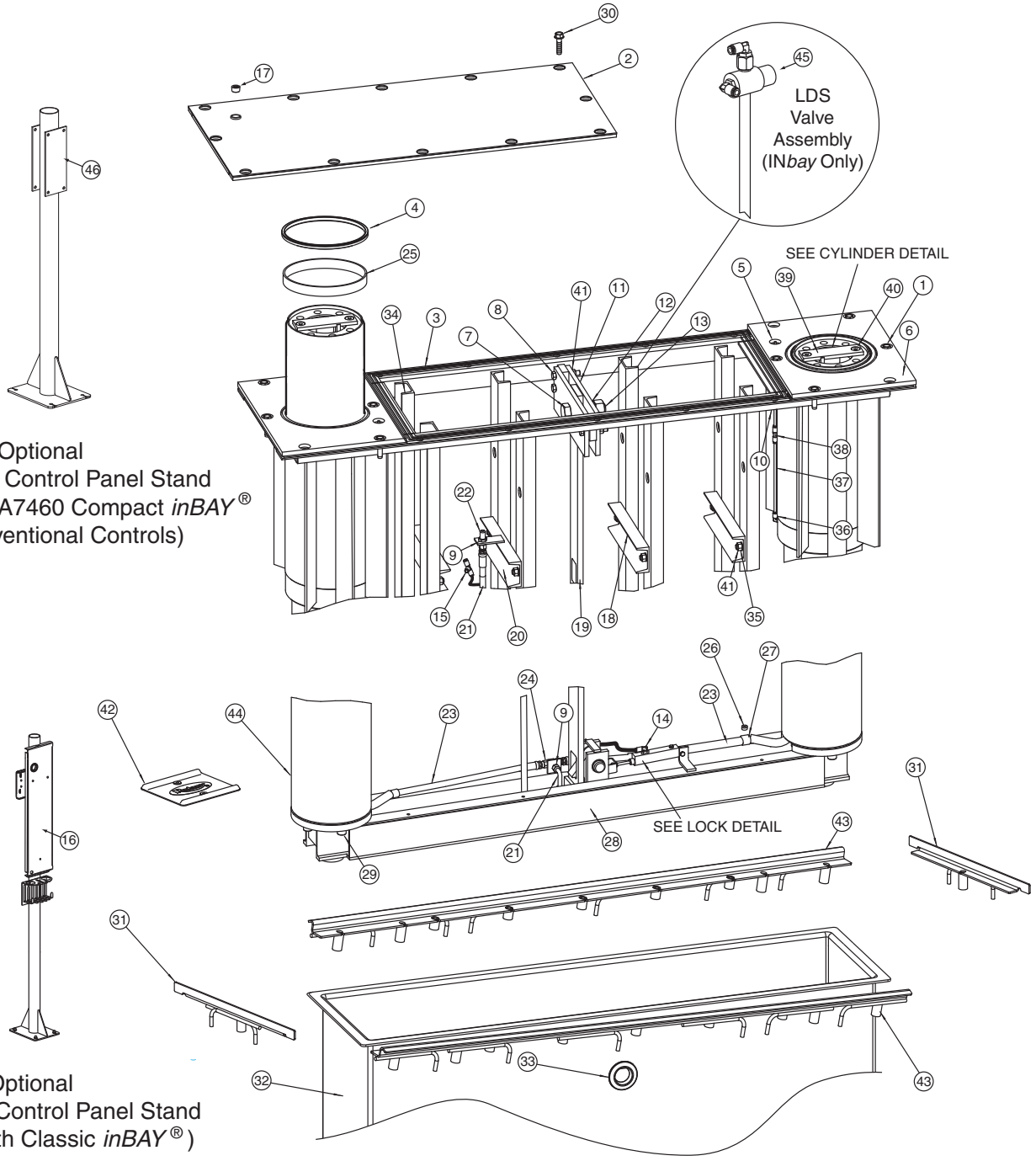

Optional
Power Unit / Control Panel Stand
(For Use With FA7460 Compact *inBAY*®
And Conventional Controls)

Optional
Power Unit / Control Panel Stand
(For Use With Classic *inBAY*®)

POWER UNIT DETAIL

Single & Three Phase inbay Compact Control

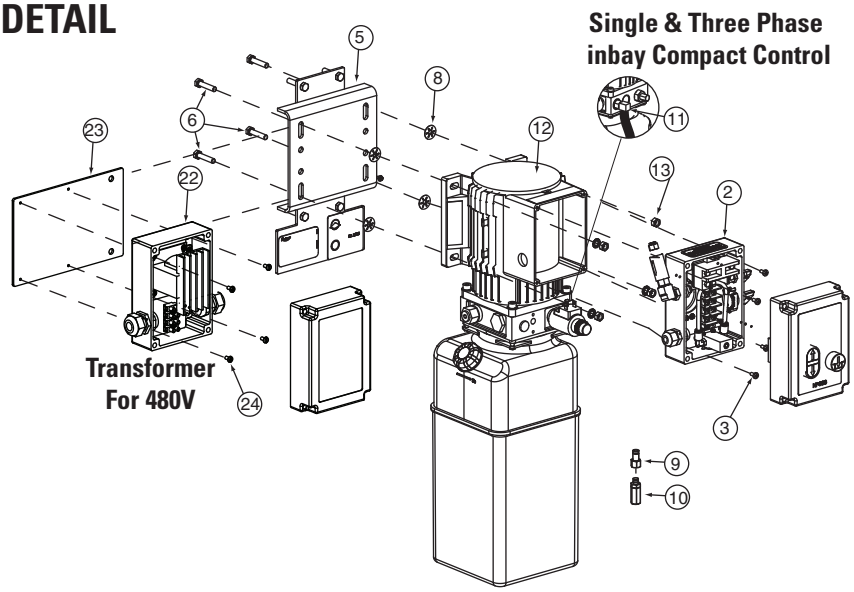

460-575V inbay Workbench Control

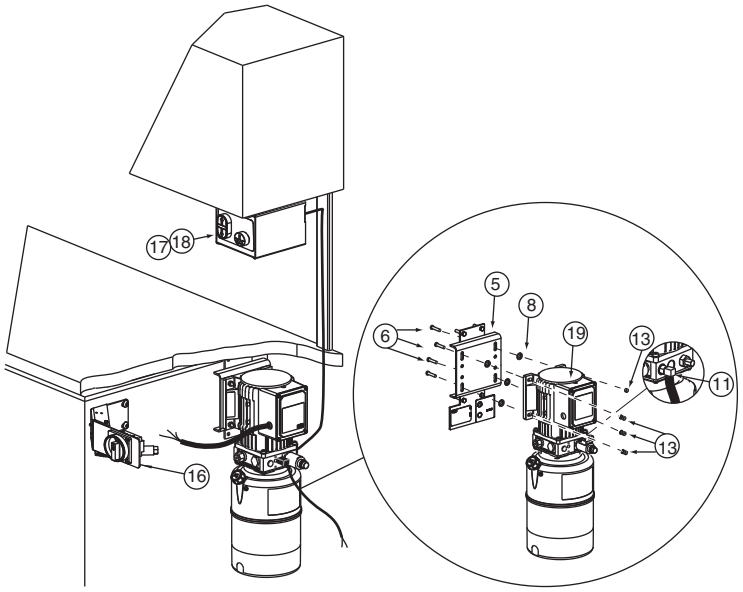

Conventional Control

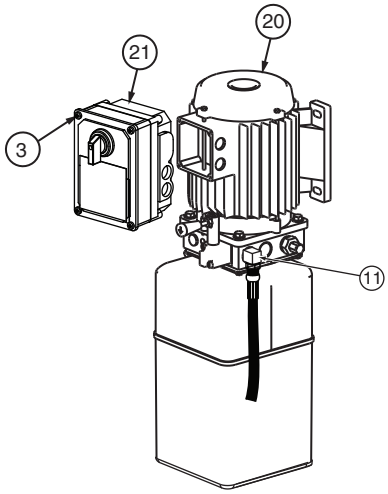

460-575V Three Phase inbay Control

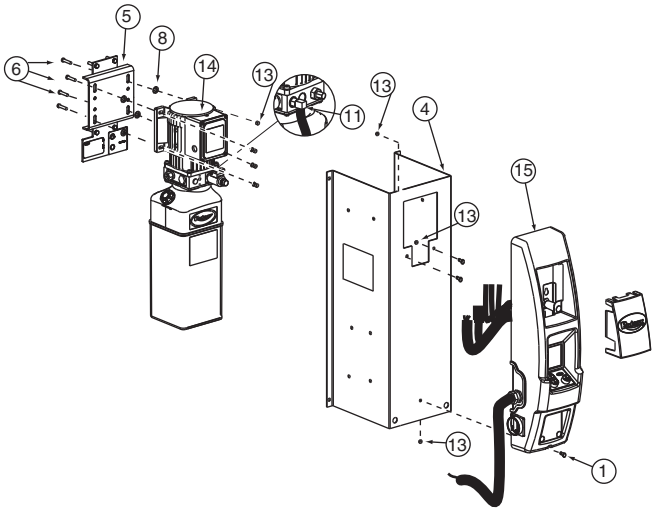

1	5/16"-18NC x 3/4" HHCS	40224
2	Master Control Panel (Compact) **1Ø**	FA7460
	Master Control Panel (Compact) **3Ø**	FA7480
	Master Control Panel (Compact) **3Ø 480V**	FA7486
3	M5x10 PHMS, Plated	40275
4	Power Unit Cover	T130309
5	Power Unit Wall Bracket	T120020
6	5/16"-18NC x 1-1/2" Flanged HHCS Zinc Plated	40509
7	NA	NA
8	5/16" Push Nut	FC5209
9	1/4" Push-In 1/4" NPT Female Fitting	T140081
10	Filter	FA3134-12
11	Elbow	FJ7224
12	SL210i Power Unit (Compact - Standard) **1Ø**	P3512
	SL210i Power Unit (Compact - Moveable Pad) **1Ø**	P3513
	SL212i Power Unit (Compact) **1Ø**	P3514
13	5/16"-18NC Flanged Hex Nut	40678
14	SL210i Power Unit (Compact - Standard) 3Ø	P3465
	SL210i Power Unit (Classic - Standard) 3Ø (575V)	P3466
	SL210i Power Unit (Compact - Moveable Pad) 3Ø	P3467
	SL210i Power Unit (Classic - Moveable Pad) 3Ø (575V)	P3468
	SL212i Power Unit (Compact) 3Ø	P3478
	SL212i Power Unit (Classic) 3Ø (575V)	P3479
15	Master Control Panel (Classic) 3Ø (460V)	FA7411
	Master Control Panel (Classic) 3Ø (575V)	FA7416
16	Work Bench Control Bracket Assembly 3Ø (460)	FA7442-1
	Work Bench Control Bracket Assembly 3Ø (575V)	FA7443-1
17	#10-24NC x 1/4" Lg. BHCS	40865
18	Work Bench Push Button Control Box 3Ø 460V-575V	FA7442-2
19	SL210i Power Unit (Work Bench - Standard) 3Ø (460)	P3496
	SL210i Power Unit (Work Bench - Standard) 3Ø (575V)	P3498
	SL212i Power Unit (Work Bench) 3Ø (460V)	P3497
	SL212i Power Unit (Work Bench) 3Ø (575V)	P3499
20	SL210 Power Unit (Conventional - Standard)1Ø	P3350
	SL210 Power Unit (Conventional - Standard) 3Ø	P3346
	SL210 Power Unit (Conventional - Standard) 3Ø (575V)	P3354
	SL210i Power Unit (Conventional - Moveable Pad) 1Ø	P3352
	SL210i Power Unit (Conventional - Moveable Pad) 3Ø	P3353
	SL210i Power Unit (Conventional - Moveable Pad) 3Ø (575V)	P3356
	SL212 Power Unit (Conventional) 1Ø	P33002
	SL212 Power Unit (Conventional) 3Ø	P3347
	SL212 Power Unit (Conventional)3Ø (575V)	P3359
21	Capacitor Box (with Drum Switch) 3Ø	FA7366
22	SL 3Ø (480V) inbay Transformer Box Assembly	FA7487
23	Transformer Box Mounting Bracket	FA7487-6
24	#10 x 3/8" SL HHTS Plated	40033

CONVENTIONAL CONTROLS AIR LOWERING VALVE DETAIL

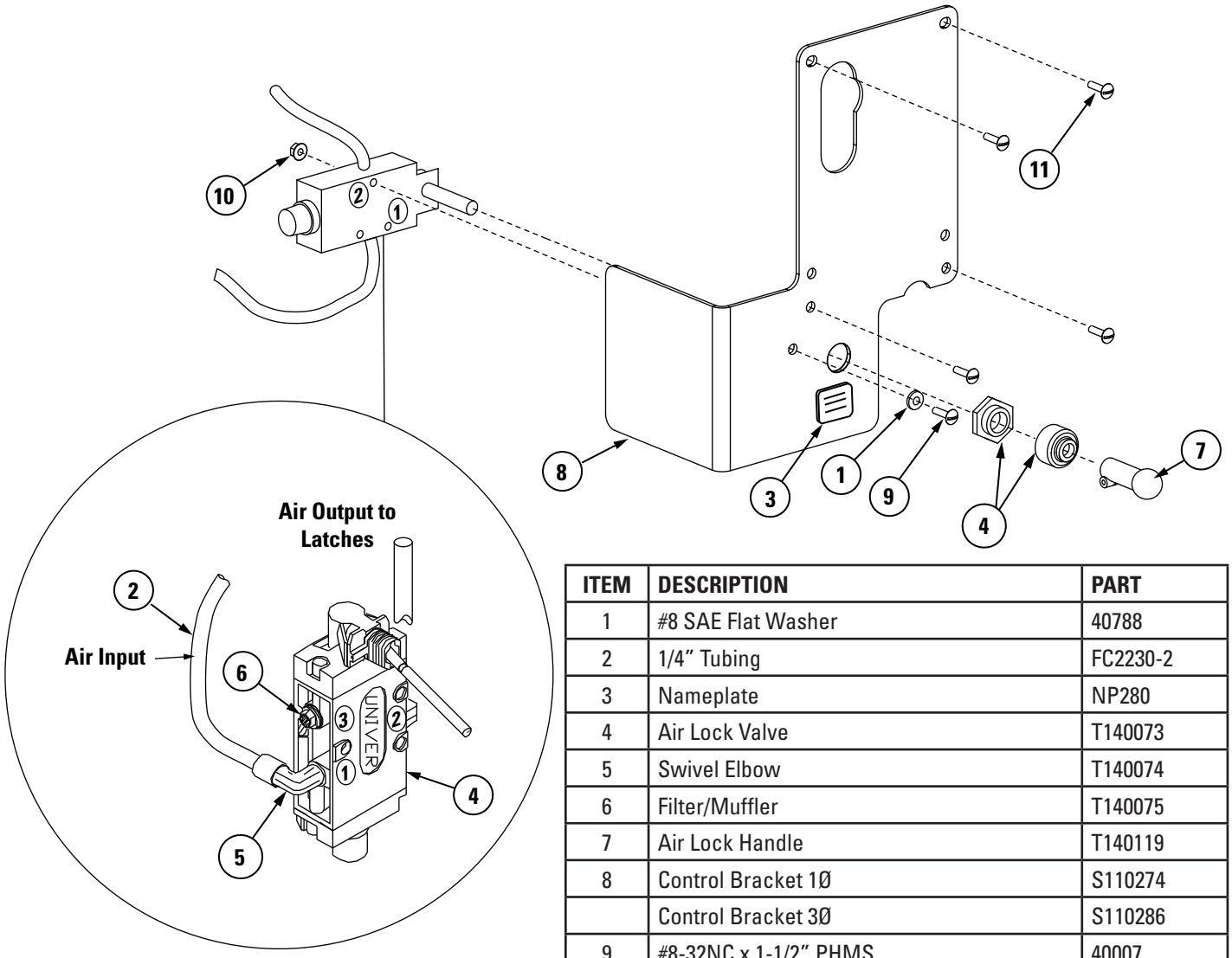

ITEM	DESCRIPTION	PART
1	#8 SAE Flat Washer	40788
2	1/4" Tubing	FC2230-2
3	Nameplate	NP280
4	Air Lock Valve	T140073
5	Swivel Elbow	T140074
6	Filter/Muffler	T140075
7	Air Lock Handle	T140119
8	Control Bracket 1Ø	S110274
	Control Bracket 3Ø	S110286
9	#8-32NC x 1-1/2" PHMS	40007
10	#8-32NC Nylon Locknut	40649
11	M5 x 0.8 PHMS 3Ø	41549
12	Capacitor Box (with Drum Switch) 3Ø	FA7366
13	M5 x 10 PHMS	40275

CYLINDER DETAIL

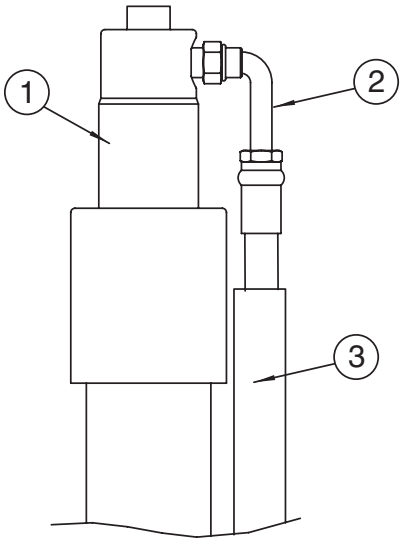

ITEM	DESCRIPTION	PART
1	Hydraulic Cylinder	N367
2	Plunger Hose	T140169
3	Hose Support Tube	T140166

LOCK DETAIL

ITEM	DESCRIPTION	PART
1	Latch Shaft Weldment	T120318
2	Locking Latch	T130348
3	Latch Clevis Pin, Plated	T140135
4	3/32" x 3/4" Lg. Cotter Pin	41168
5	1/4"-28NF Nylon Insert Locknut, Plated	40611
6	1/4"-28NF x 1-1/4" HHCS, Grade 2	40414
7	Air Cylinder	T140062
8	Clevis	T130349
9	Retaining Ring TRUARC #5304-125	41417

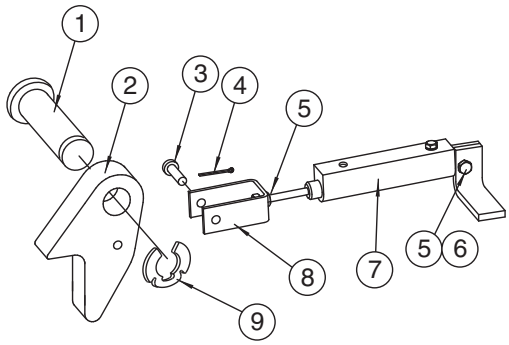

SL212 ARM DETAIL
800 SERIES

ITEM	DESCRIPTION	PART
1	4" Extension	FJ6143
	8" Extension	FJ6144
2	Adapter Assembly	FJ6158
3	Yoke Weldment	T120152
4	Swing Arm	T110116
5	7/8"-9NC x 3-1/2" HHCS, Grd 5, Plated	40498
	7/8" External Tooth Lockwasher, Plated	41072
6	Arm Pin	T120153
	3/16" x 3" Cotter Pin	41253
7	Extension Rack	FJ6145

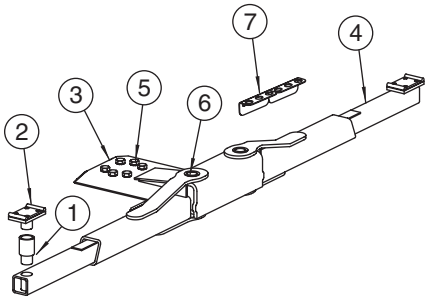

SL212 ARM DETAIL
1000 SERIES

ITEM	DESCRIPTION	PART
1	3-1/2" Extension	FJ6171-1
	5" Extension	FJ6171-2
2	Adapter Assembly	FJ6214
3	Yoke Weldment	T120152
4	Swing Arm	T110528
5	7/8"-9NC x 3-1/2" HHCS, Grd 5, Plated	40498
	7/8" External Tooth Lockwasher, Plated	41072
6	Arm Pin	T120153
	3/16" x 3" Cotter Pin	41253
7	Extension Rack	FJ6127

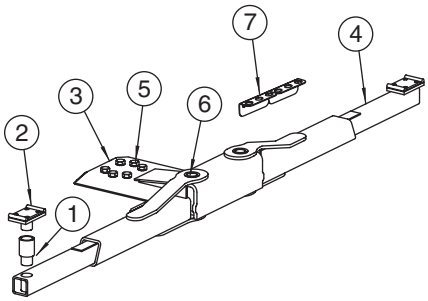

SL210 2-STAGE ARM DETAIL
800 SERIES

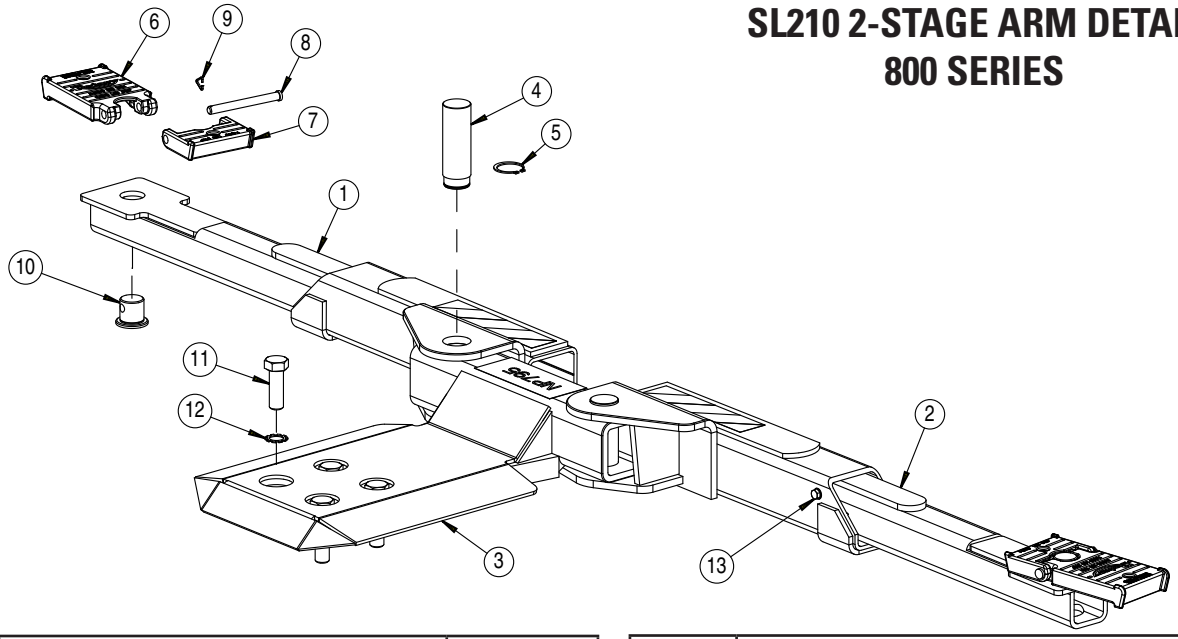

ITEM	DESCRIPTION	PART
1	R. H. 2-Stage Arm	T110318
2	L. H. 2-Stage Arm	T110317
3	Yoke	T110312
4	Arm Pin	T130451
5	Arm Pin Retaining Ring	T140168
6	High Step Adapter	FJ6177
7	Low Step Adapter	FJ6178
8	Adapter Pin	FJ6179
9	3/32" Hog Ring For 1/2" Shaft	FJ671-6
10	Adapter Swivel Pin	FJ79-6
11	7/8"-9NC x 2-1/2" HHCS, Grade 5	40489
12	7/8" External Tooth Lock Washer	41072
13	3/8"-16NC x 5/8" HHCS, Grade 8	40155
	3/8" Internal Tooth Lock Washer	40843

SL210 3-STAGE ARM DETAIL
800 SERIES

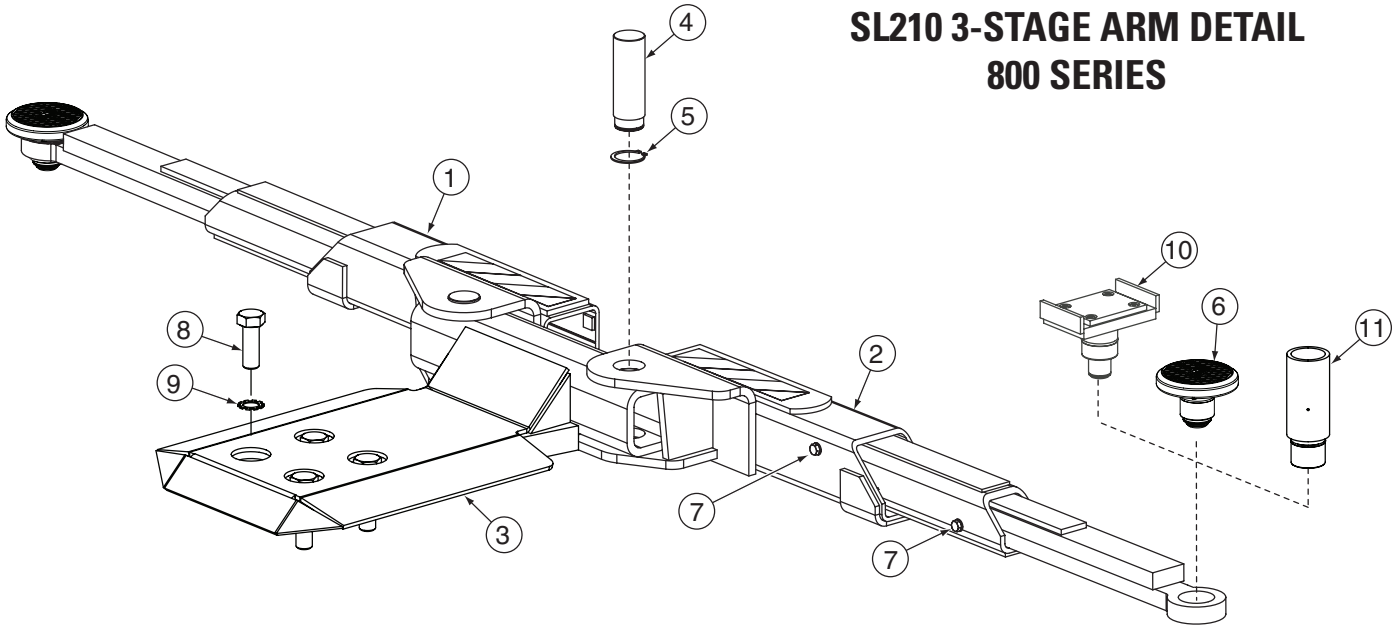

ITEM	DESCRIPTION	PART
1	R. H. 3-Stage Arm	T110320
2	L. H. 3-Stage Arm	T110319
3	Yoke (without Stop Bar)	T110312
4	Arm Pin	T130451
5	Arm Pin Retaining Ring	T140168
6	3-Stage Adapter Assembly (Low Profile)	FJ6202
7	3/8”-16NC x 5/8” HHCS, Gr. 8, Plated	40155
	3/8” Internal Tooth Lockwasher	40843
8	7/8”-9NC x 2-1/2” HHCS, Gr. 5, Plated	40489
9	7/8” External Tooth Lockwasher, Plated	41072
10	Truck Adapter (Optional, Sold Separately)	FJ6214
11	Extension Adapter Kit (Optional, Sold Seperately)	FJ7880

SL210 MOVEABLE PAD DETAIL

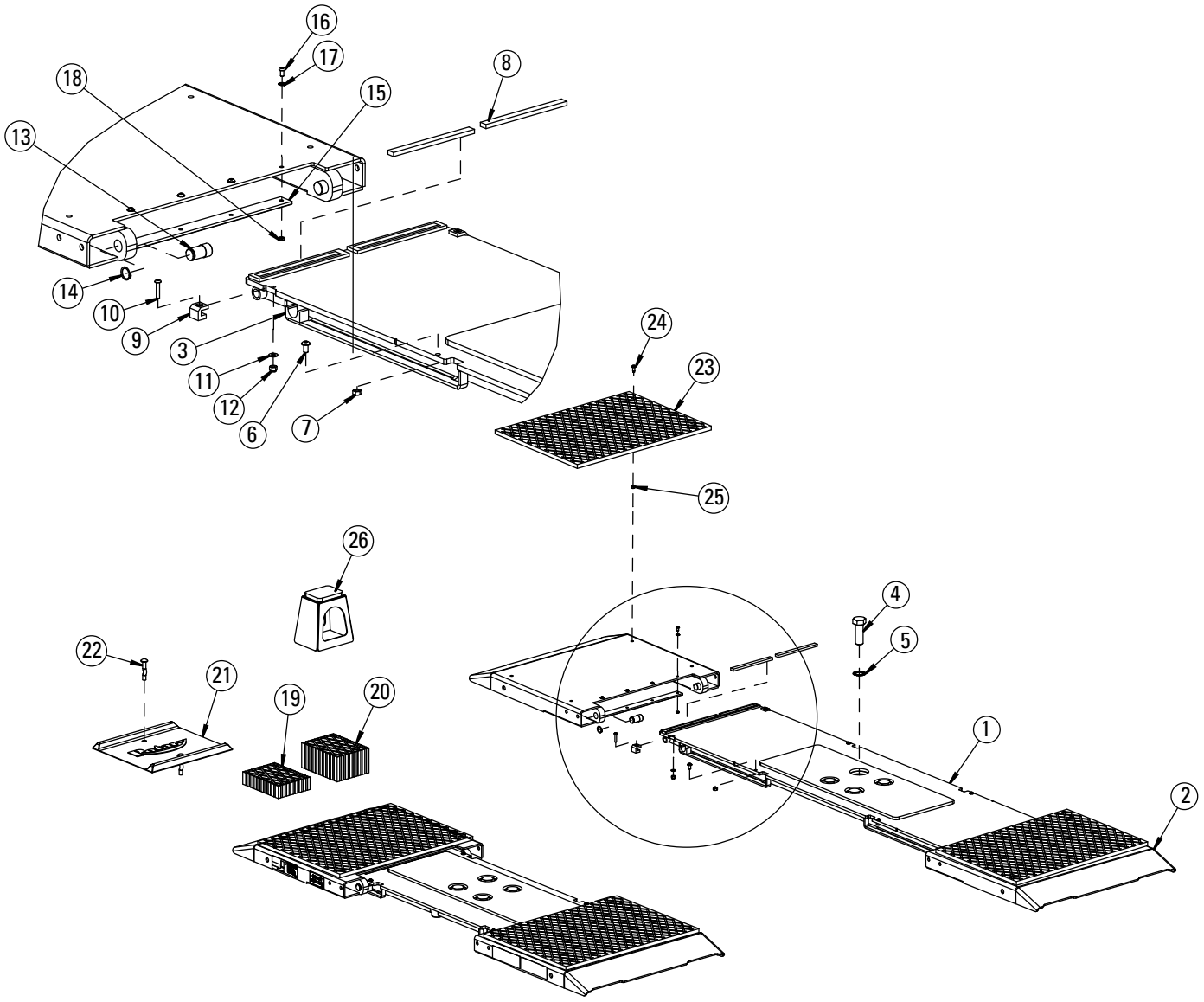

ITEM	DESCRIPTION	PART
1	Carrier Assembly	T110468
2	Slide Assembly	T110467
3	Slider Block	T140231
4	7/8”-9NC x 2-1/2”	40489
5	7/8” Ext. Tooth Lock Washer	41072
6	1/4”-20 x 1/2” Lg. Zinc Plated BHCS	40094
7	1/4”-20 Zinc Plated Hex Nut	40625
8	Carrier Rubber Pad	T140241
9	Carrier Wear Strip	T140233
10	#10-24NC x 1” Lg. Zinc Plated BHCS	40871
11	#10 SAE Zinc Plated Flat Washer	40785
12	#10-24NC Zinc Plated Nylon Lock Washer	40811
13	Reaction Pin	T130588
14	Zinc Plated Reaction Pin Retaining Ring	T140235

ITEM	DESCRIPTION	PART
15	Slide Wear Strip	T140232
16	#10-32NC x 3/8” Stainless Steel BHCS	T140238
17	#10 Stainless Steel Flat Washer	T140244
18	#10-32NF Stainless Steel Small Pattern Hex Nut	T140234
19	1-1/2” Spacer Block	FJ2427
20	3” Spacer Block	FJ2428
21	Spotting Dish	FF729-1
22	Spotting Dish Anchor	FJ7659-2
23	1/2” Rubber Pad	FJ2480
	1/2” Rubber Pad Kit (4 Pads & Mounting Hdw)	FJ2487
24	M6 x 1.0 x 16mm PHMS Stainless	41690
25	M6 Nylon Insert Lock Nut	41556
26	7” Adapter (Optional)	FJ6205
	7” Adapter Kit -4 Adapters (Optional)	FJ6211

SL210 TRIO ARM DETAIL
1000 SERIES

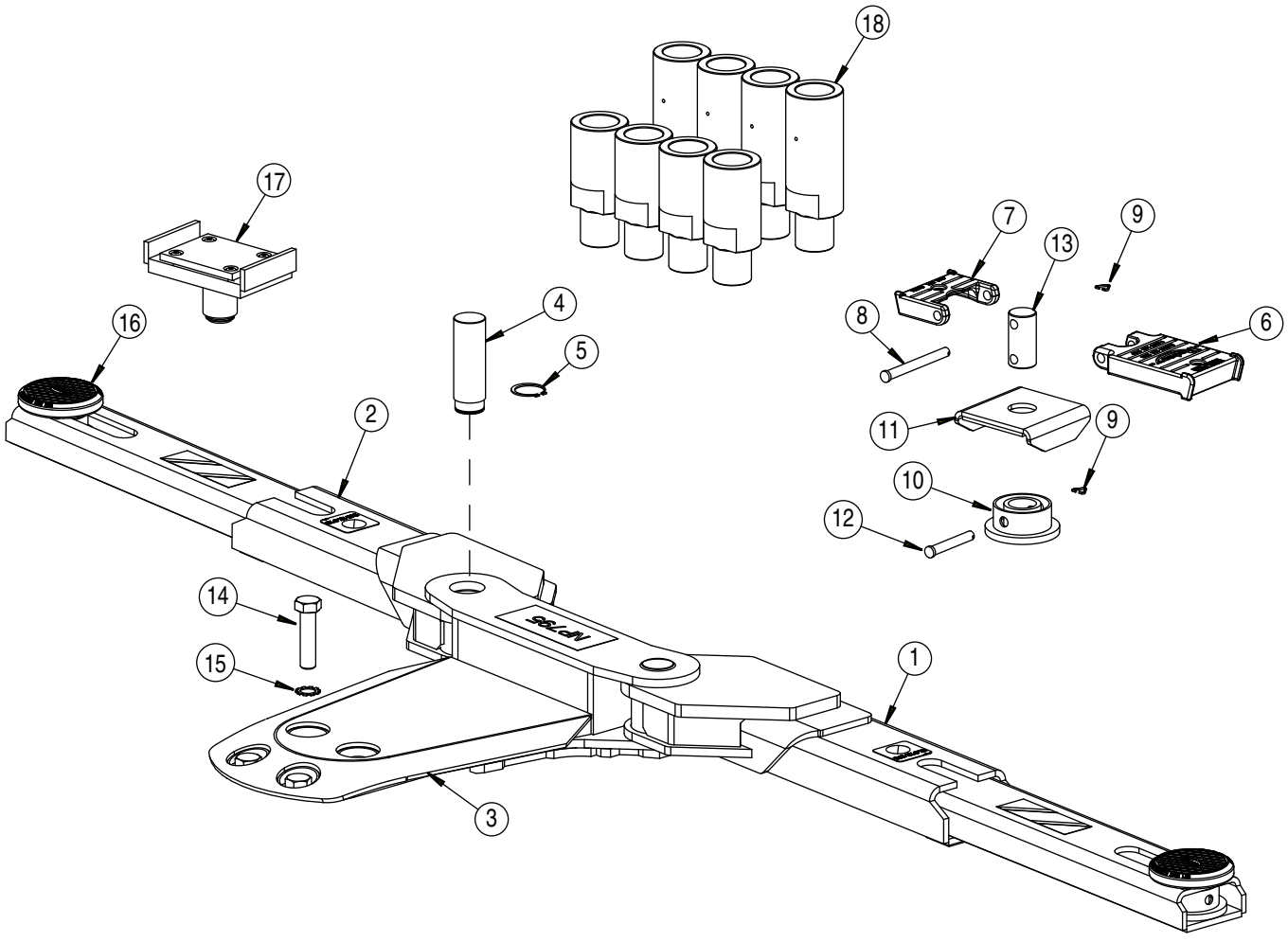

ITEM	DESCRIPTION	PART
1	R. H. Arm	T110586
2	L. H. Arm	T110585
3	Yoke	T110538
4	Arm Pin	T130629
5	Arm Pin Retaining Ring	T140248
6	High Step Adapter	FJ6177
7	Low Step Adapter	FJ6178
8	Adapter Pin	FJ6179
9	3/32" Hog Ring For 1/2" Shaft	FJ671-6

10	Adapter Insert	T120309
11	Load Plate Weldment	T120310
12	Adapter Insert Pin	T130669
13	Swivel Pin	T130668
14	7/8”-9NC x 2-1/2” HHCS, Gr. 5, Plated	40489
15	7/8” External Tooth Lockwasher, Plated	41072
16	Low Profile Round RA Adapter	FJ6219
17	Truck Adapter	T110564
18	Extension Adapter Kit (Sold Separately)	T100271

THIS PAGE INTENTIONALLY LEFT BLANK

Rotary World Headquarters
2700 Lanier Drive
Madison, IN 47250, USA
www.rotarylift.com

North America Contact Information
Tech. Support:
p 800.445.5438
f 800.578.5438
e userlink@rotarylift.com
Sales: p 800.640.5438
f 800.578.5438
e userlink@rotarylift.com

World Wide Contact Information
World Headquarters/USA: 1.812.273.1622
Canada: 1.905.812.9920
European Headquarters/Germany: +49.771.9233.0
United Kingdom: +44.178.747.7711
Australasia: +60.3.7660.0285
Latin America / Caribbean: +54.3488.431.608
Middle East / Northern Africa: +49.771.9233.0

© Vehicle Service Group℠
Printed in U.S.A., All Rights Reserved. Unless otherwise indicated, ROTARY, and all other trademarks are property of Dover Corporation and its affiliates.